Experiment No: 10

Experiment Name: Study on Basic Construction on Cathode Ray Tube (CRT) and Observation Circuit Diagram of Television Broadcasting.

Objective: To gain practical experience with the principles and processes involved in television broadcasting, focusing on specific area of focus, e.g., signal generation, reception, system performance, content creation, or audience reception.

- Understand the key components and processes involved in television broadcasting.
- Develop practical skills in signal generation, transmission, reception, and demodulation.
- Analyze and interpret technical parameters and performance metrics.
- Critically evaluate the impact of different factors on television broadcasting quality and effectiveness.
- Gain insights into the application of television broadcasting in various contexts.

Equipment: Motta di Livenza (TV) Italy M25/EV

Television (TV), a form of mass media based on the electronic delivery of moving images and sound from a source to a receiver. By extending the senses of vision and hearing beyond the limits of physical distance, television has had a considerable influence on society. Conceived in the early 20th century as a possible medium for education and interpersonal communication, it became by mid-century a vibrant broadcast medium, using the model of broadcast radio to bring news and entertainment to people all over the world. Television is now delivered in a variety of ways: "over the air" by terrestrial radio waves (traditional broadcast TV); along coaxial cables (cable TV); reflected off of satellites held in geostationary Earth orbit (direct broadcast satellite, or DBS, TV); streamed through the Internet; and recorded optically on digital video discs (DVDs) and Blu-ray discs.

The technical standards for modern television, both monochrome (black-and-white) and colour, were first established in the middle of the 20th century. Improvements have been made continuously since that time, and television technology changed considerably in the early 21st century. Much attention was focused on increasing the picture resolution (high- definition television [HDTV]) and on changing the dimensions of the television receiver to show wide-screen pictures. In addition, the transmission of digitally encoded television signals was instituted to provide interactive service and to broadcast multiple programs in the channel space previously occupied by one program.

Despite this continuous technical evolution, modern television is best understood first by learning the history and principles of monochrome television and then by extending that learning to colour. The emphasis of this article, therefore, is on first principles and major developments-basic knowledge that is needed to understand and appreciate future technological developments and enhancements. Because American TV programs, like American popular culture in general in the 20th and early 21st centuries, have spread far beyond the boundaries of the United States and have had a pervasive influence on global popular culture, see also "television in the United States," which deals with the history and development of TV programs. Activate Wind Transmission and reception involve the components of a television system that generate, gs to a transmit, and utilize the television signal wave form (as shown in the block diagram). The scene to be televised is focused by a lens on an image sensor located within the camera.

This produces the picture signal, and the synchronization and blanking pulses are then added, establishing the complete composite video wave form. The composite video signal and the sound signal are then imposed on a carrier wave of a specific allocated frequency and transmitted over the air or over a cable network. After passing through a receiving antenna or cable input at the television receiver, they are shifted back to their original frequencies and applied to the receiver's display and loudspeaker.

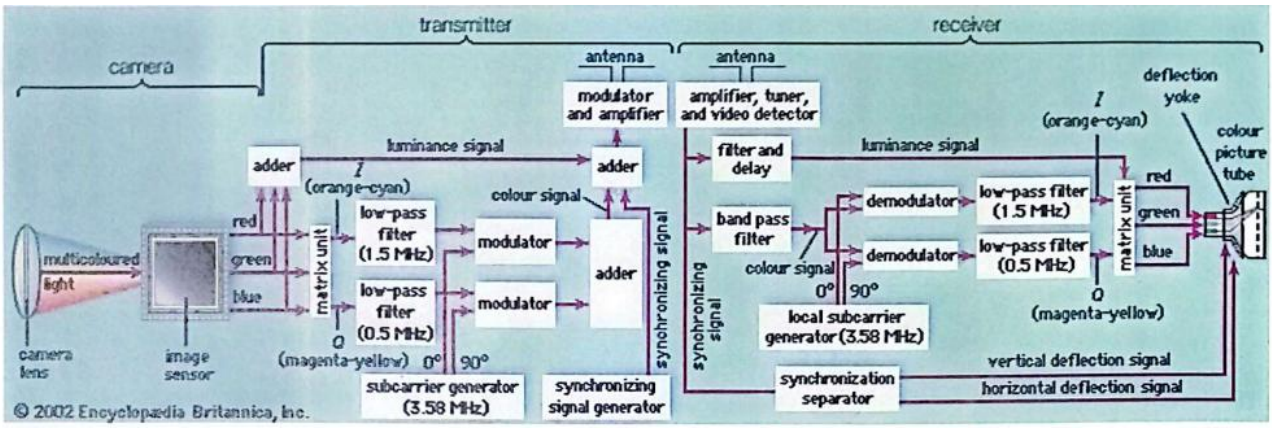

Figure 1: Components of the Colour Television Transmitter and Receiver.

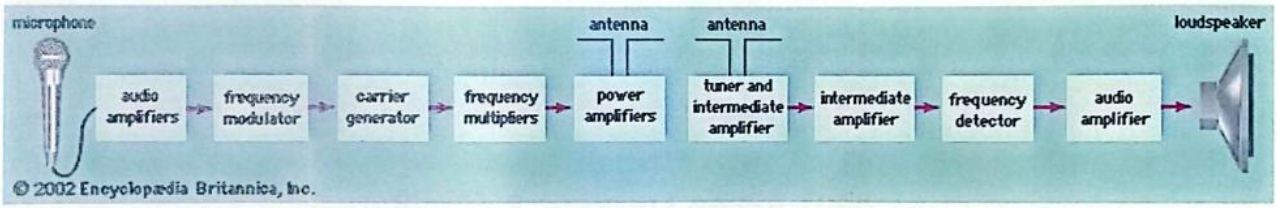

Figure 2: Components of the Television Sound Transmission and Reception

Colour Television Picture Tube: At right are the electron guns, which generate beams corresponding to the values of red, green, and blue light in the televised image. At left is the aperture grille, through which the beams are focused on the phosphor coating of the screen, forming tiny spots of red, green, and blue that appear to the eye as a single colour. The beam is directed line by line across and down the screen by deflection coils at the neck of the picture tube.

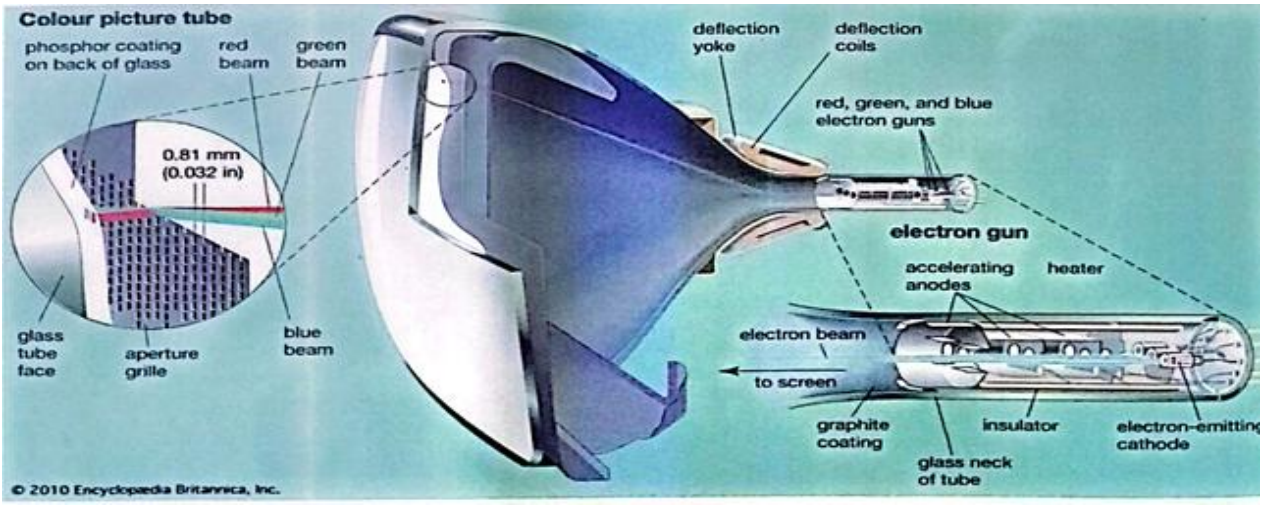

Figure 3: Colour Picture Tube Block Diagram

DESCRIPTION OF THE FUNCTIONAL BLOCKS

Tuner : The RF signal coming from the antenna is applied to the Tuner Input, where it is converted into an Intermediate Frequency signal through a Mixer and a Local Oscillator. The frequency of the local oscillator can be modified, so that it can tune various stations.
The IF signal is amplified and sent to a Surface Acoustic Wave (SAW) filter which supplies the proper attenuations to the video, chroma and sound carriers of the received channel and of the adjacent channels.The baseband video signal containing all the information of luminance, chrominance, sync signals, IF audio, is separated through demodulation of the IF signal.

Audio : The audio path starts with the separation of the IF audio signal from the complete IF signal. The frequency of the sound (audio) carrier depends on the transmission standard (4.5 - 5.5 - 6 - 6.5 MHz); the frequency selection is driven by some control lines coming out of the microprocessor.Then the FM demodulator will detect the low-frequency audio signal coming from the antenna-tuner-IF path. A switch selects the internal audio signal or the audio signal coming from the External Audio socket, and sends it to the output power amplifier.

Video : The audio IF components superimposed on the video signal are filtered by band-rejection filters (audio traps) whose frequency depends on the reception standard.
The resulting composite video signal (CVBS) contains all the information of luminance, chrominance and sync signals which are processed by specific sections.

Sync signals & Deflections : The processing circuit of horizontal sync signals separates the necessary signals for the synchronization of the horizontal oscillator (H) and the phasing of the H deflection with the picture. The H oscillator supplies the signal to the Driver controlling the output stage; in its turn this stage also drives the line transformer. The signals for the H deflection coils, and the voltages of grid 2 and of focus, as well as the Extra High Tension (EHT) of approximately 25 kV, are separated from the line transformer.The horizontal deflection coils will be crossed by a current that moves the electronic beam in horizontal direction inside the CRT, for the line generation. The sync signals separated from the video signal are also sent to the vertical oscillator that generates the vertical sync pulses for driving the V output power stage.
The vertical deflection coils will be crossed by a current that moves the electronic beam in vertical direction inside the CRT, for the generation of the vertical frame.

Luminance : The luminance signal (or Y signal) starts being processed from the composite video signal CVBS. The chrominance component (at 4.43 or 3.58 MHz) is eliminated through band-rejection filters.Then the signal is amplified (contrast control) and shifted (brightness control) continuously; finally it is sent to a matrix circuit. In this matrix, the R-G-B signals driving the video output amplifiers are obtained from the Y signal and from the B-Y and R-Y signals.

Chrominance : Chrominance will be processed along two different paths according to the (Pal/NTSC or Secam) standard of the received signal. The R-Y and B-Y signals that will be sent to the matrix circuit, are obtained from the colour decoding stages.
The matrix can also receive external RGB signals that correspond to the OSD (On Screen Display) signals in this application. The RGB signals are amplified and then they drive the cathodes of the CRT.
Power supply : The power supply mainly consists of a rectifier of the line alternating voltage and of a self-oscillating Switching circuit that drives the power transformer. The main voltages required for the operation of the TV set are obtained (by rectification) on the secondary winding of this transformer.

Microprocessor : The Microprocessor (or μP) carries out the interface between the user and the internal circuits of the TV set. The control lines are obtained with I/O (Input/Output) ports.

Commands can be sent through an infrared (IR) remote control or from a local keyboard. At present the tuning function is carried out by a unique component, typically called Tuner or Front-End unit, like that shown in the fig. 4.

Figure 4: Tunner Unit

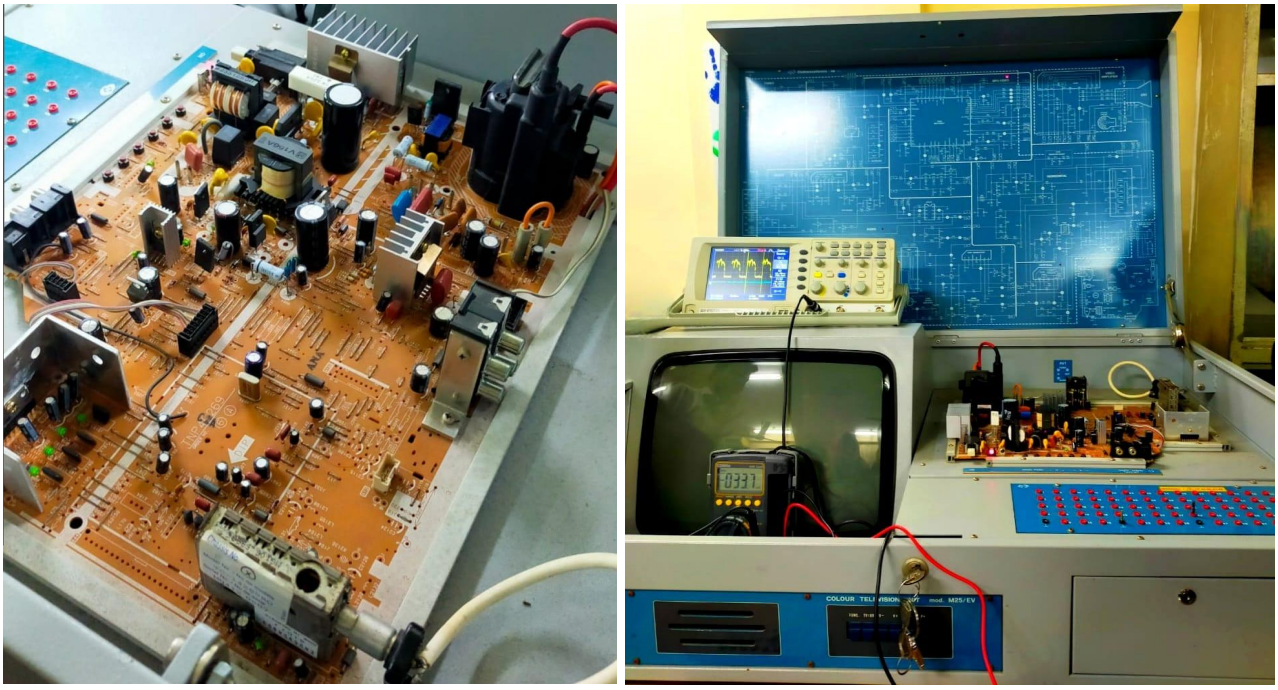

Figure 5: Block Diagram of the Tuner Unit (a) & Tuner section (b)

Procedure:

1. Connect external points given on monochrome TV trainer kit by connecting wires.
2. Connect Pattern generator/Antenna output to the RF input of Monochrome TV receiver.
3. Tune the TV receiver and get the bar pattern picture on TV screen.
4. Connect dual trace CRO to observe the following waveforms:
5. Composite video signal for a line
6. Horizontal Sweep Waveform
7. Composite video signal for a field
8. Vertical sweep waveform

Observation: Observe and measure amplitude, time period on CRO for the following signals:

By providing RF signals through Antenna:

1. Observe and study composite video signal for live signal coming from antenna.
2. By providing different patterns using Colour Pattern generator.
3. Observe and study composite video signal for various patterns provided by colour pattern generator.

By providing signal from colour camera:
Observe and study composite video signal for video signal coming from colour camera.
Observe the following waveform on various stages of monochrome TV receiver.

1. Sync Separator circuit output.
2. Horizontal Oscillator stage output.
3. Vertical oscillator stage output.
4. Vertical deflection coil current waveform.

Discussion: The experiment successfully demonstrated the signal flow and synchronization within a Television receiver using a monochrome TV trainer kit. The process begins at the Tuner, which converts the incoming RF signal into an Intermediate Frequency (IF) through a mixer and local oscillator. The Sync Separator then extracts timing pulses from the composite video signal to synchronize the horizontal and vertical oscillators. During the lab, the CRO was used to observe critical waveforms, including the composite video signal and sweep waveforms, which are essential for stable image generation. The horizontal oscillator drives a line transformer to produce the Extra High Tension (EHT) of approximately 25 kV required for the CRT, while the Luminance (Y) and Chrominance signals are processed through a matrix circuit to drive the CRT cathodes. Ultimately, the experiment highlighted how the Power Supply and Microprocessor work together to provide stable voltages and user control, ensuring the raw RF input is correctly transformed into a visible bar pattern on the screen.